BY	CHK	REVISION RECORD MODIFICATIONS	DATE	REV.
ALLEN		RELEASE TO PRODUCTION	2007,7,30	1.0

SPECIFICATION
Curerent Rate: 1 AMP
Insulation Rrsistance: 1000mΩMin
Conract Resistance: 20mΩMax
Dielectric voltage: 500V AC for one minute
Operation Temperature: -40℃to +105℃

MATERIAL
Insulator: Polyester,UL94v-0
◎Standard: Nylon 6T
Conract Pin: Brass
Finish: Tin, Gold Plated
◎Standard: Gold Flash all over

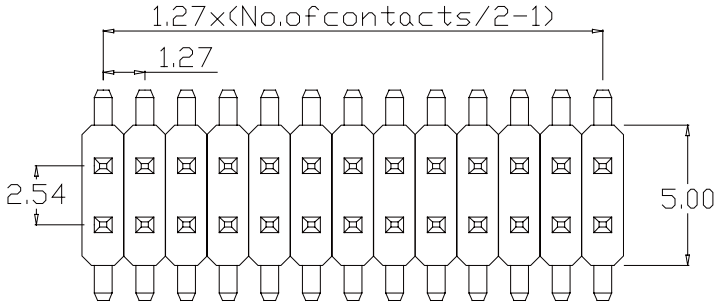

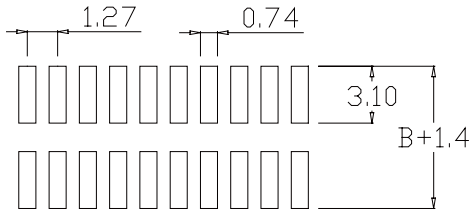

Recommended PCB Layout
(PCB TOLERANCE±0.05)

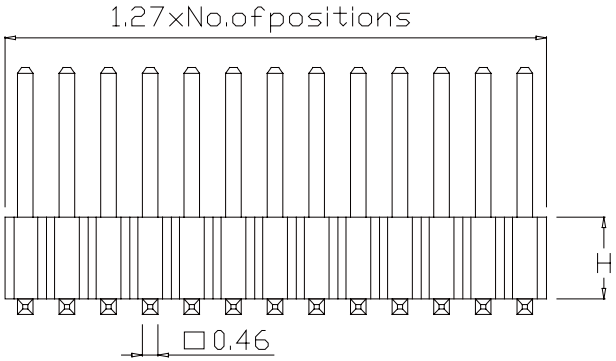

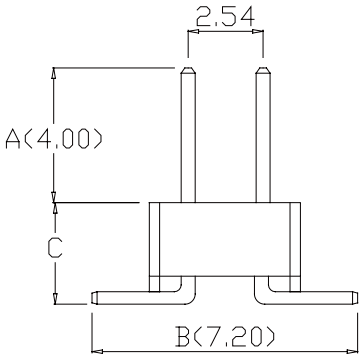

	C
H=1.7	2.20
H=2.5	3.00

P H 4 M X X - 2 X X X B X X A/B/C - U

- 17: Plastic Height H=1.7mm
- 25:Plastic Height H=2.5mm
- No.ofcontacts per row (01-50)
- G:Gold flah / S:Selective; GA:Gold 5u" / SA:Selective5u"; GB:Gold 10u" / SB:Selective10u"; GC:Gold 20u" / SC:Selective20"; GD:Gold 30u" / SD:Selective30"; T:Tin Plated / TE:Tin200u"
- B:BlackInsulator
- □:w/o cap; C:With cap
- B:Bag Package; T:Tube; R:Taping&Reel
- Fill inDimensionFor Special Design
- U:RoHS+Nylon6T

APPRO	CHECK	DRAWN	PART NO.	PH4MXX-2XXXBXXA/B/C-U			DESCRIPTION	VIGORTEC
			ITEM NO.					
			DRAW NO.					
			UNIT	mm	SCALE	no		
			TOLER		NO.		Tel: 0769 22020068 Fax: 0769 22020069 E-mail: sales@vigortec.com	